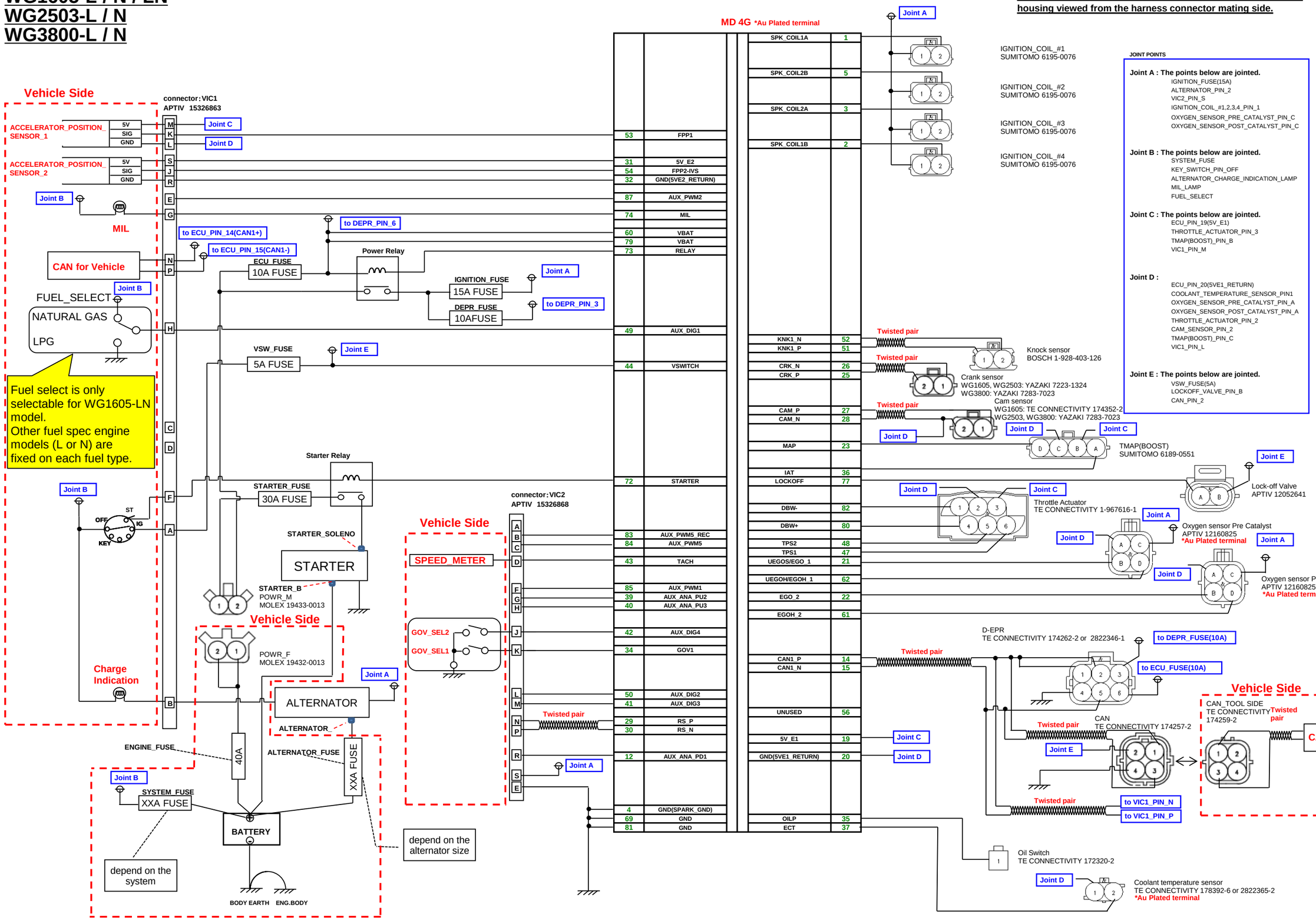# WG1605-L / N / LN
# WG2503-L / N
# WG3800-L / N